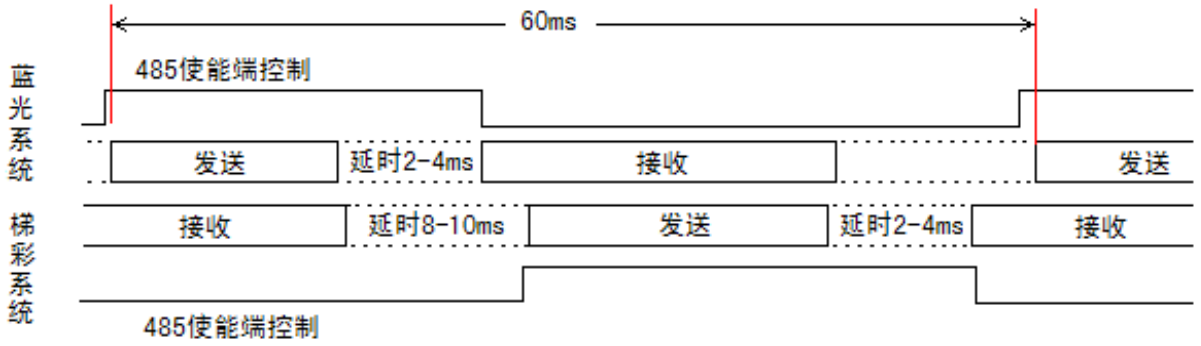

0xaa	0xa1/0xa2/0xa3		0/ 1	

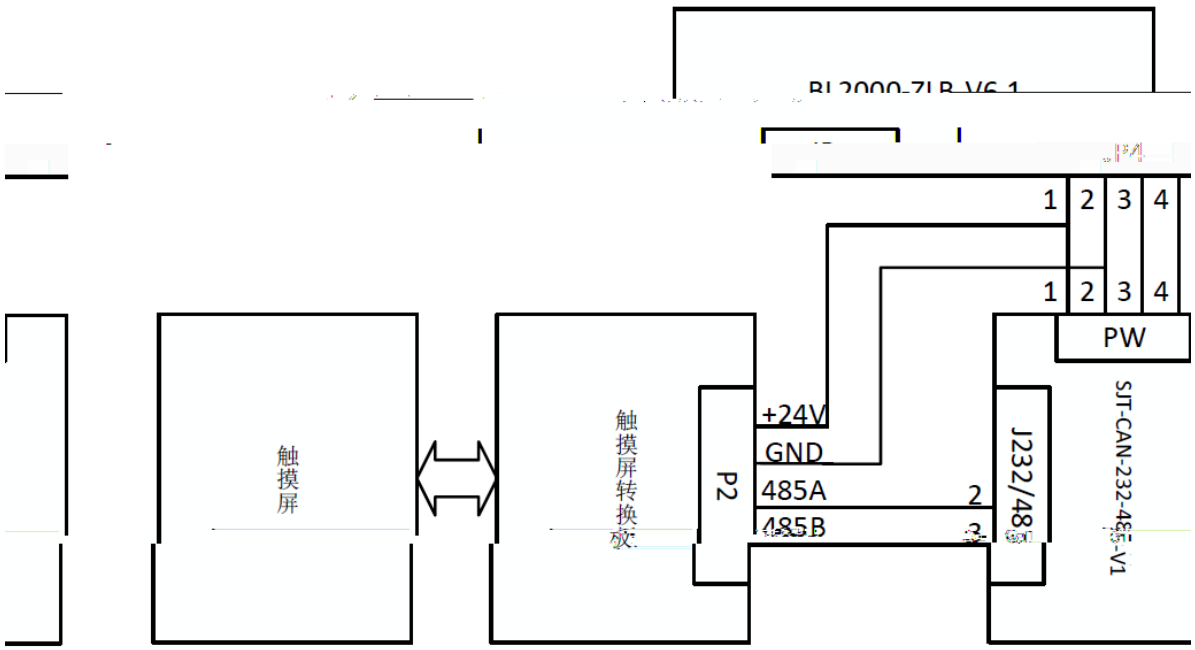
触摸屏
触摸屏转换板
P2
+24V
GND
485A
485B
J232/485
SJT-CAN-232-485-V1
PW
1
2
3
4
1
2
3
4
2
3